CITY OF PLANO
COUNCIL AGENDA ITEM

CITY SECRETARY'S USE ONLY
☐ Consent ☐ Regular ☐ Statutory

Council Meeting Date:	03/14/16
Department:	Building Inspections
Department Head	Selso Mata
Agenda Coordinator (include phone #):	**Diana Casady #5993**

CAPTION

An Ordinance of the City of Plano, Texas repealing City of Plano Ordinance No. 2013-10-25 codified as Article XX, Residential Code, of Chapter 6 of the Code of Ordinances; and adopting the 2015 Edition of the International Residential Code with certain additions, deletions, and amendments, as the Residential Code of the City of Plano; and providing a repealer clause, a severability clause, a savings clause, a penalty clause, a publication clause and an effective date.

FINANCIAL SUMMARY

☒ NOT APPLICABLE ☐ OPERATING EXPENSE ☐ REVENUE ☐ CIP

FISCAL YEAR: **2015-16**	**Prior Year (CIP Only)**	**Current Year**	**Future Years**	**TOTALS**
Budget	0	0	0	**0**
Encumbered/Expended Amount	0	0	0	**0**
This Item	0	0	0	**0**
BALANCE	0	0	0	**0**

FUND(S): N/A

COMMENTS: This item has no fiscal impact.

STRATEGIC PLAN GOAL: Repealing City of Plano Ordinance No. 2013-10-25 relates to the City's Goal of a Financially Strong City with Service Excellence and a Safe Large City.

SUMMARY OF ITEM

This Ordinance will adopt the most recent version of the International Building Codes published by the International Code Council and includes regional amendments which have been developed by the North Central Texas Council of Governments. The Building Standards Commission held public code review meetings in September, October, November, and December of 2015. At their January 19, 2016 meeting the Commission voted unanimously to recommend the Codes with amendments to the City Council for adoption as the Residential Code for the City of Plano.

List of Supporting Documents:	Other Departments, Boards, Commissions or Agencies
Letter from the Home Builders Association	
Letter from Council of Governments	
Letter from the Building Standards Commission	

CITY OF PLANO
COUNCIL AGENDA ITEM

Building Department Memo	

Memorandum

Date: March 1, 2016

To: Bruce D. Glasscock, City Manager
Jack Carr, Deputy City Manager

From: Selso Mata, Chief Building Official

Subject: **2015 International Code - Adoption**

Every three years, building codes are promulgated by the International Code Council. Jurisdictions throughout the nation review these codes for their use and adoption. For the past year and half, Plano has continued its established code review process for the 2015 Codes through the North Central Texas Council of Governments. Upon completion of this process, the codes are further vetted through our Building Standards Commission. Our review is now complete. The following 2015 Codes are recommended to the City Council for adoption.

2015 International Building Code
2015 International Residential Code
2015 International Mechanical Code
2015 International Plumbing Code
2015 International Fuel and Gas Code
2015 International Energy Conservation Code
2015 International Existing Building Code

A common question at this time is; Are there any changes in the codes? One can imagine with thousands of pages of material and improvements in building products each year that some changes are expected. This is not uncommon at each code cycle. However, the development community is involved with adoption of the codes at the national, state, and regional levels. Many changes in the codes are editorial in nature and consist of relocated information and clarification language and meaning. Yet all building codes remain minimum standards and requirements for building safety in each respective category.

One such change is a new requirement for storm shelters based on geographic locations which have a potential for strong wind storm occurrence. Plano falls within this defined regional area and as a result, storm shelters are now required for new schools, police stations, fire stations, 911 emergency call centers and emergency operation centers. The storm shelter must consist of a building or room large enough to accommodate the occupants of the use with a structural integrity capable of withstanding a 250 M.P.H. wind load. This would only apply to new schools and buildings or additions to a school or building as described. The Plano Independent School District is aware of this requirement for inclusion in future projects.

Please let me know if you need additional information.

Plano
City of Excellence

Memo

Date: February 16, 2016

To: Bruce D. Glasscock, City Manager

From: Art Stone, Chairman, Building Standards Commission

Subject: **Adoption of the 2015 International Codes with Amendments**

The Building Standards Commission, along with staff, has reviewed the 2015 International Building Codes with amendments at each monthly meeting occurring from August 2015 through January 2016 until completion. In addition, staff has vetted the codes with the North Central Council of Governments and made Plano amendment presentations for each code to our Commission. All code review is now completed.

It is my pleasure to inform you that the Building Standards Commission unanimously recommends the following codes with amendments to the City Council for approval and adoption;

2015 International Building Code
2015 International Residential Code
2015 International Plumbing Code
2015 International Mechanical Code
2015 International Fuel and Gas Code
2015 International Energy Conservation Code
2015 International Existing Building Code

Sincerely,

Art Stone
Chairman
Building Standards Commission

North Central Texas Council Of Governments

TO: Local Governments throughout North Central Texas

DATE: September 21, 2015

FROM: Mike Eastland
Executive Director

David Kerr
Chair, Regional Codes Coordinating Committee

SUBJECT: 2015 International Codes and Regional Code Amendments for North Central Texas

The North Central Texas Council of Government's (NCTCOG) Executive Board, upon the recommendation of the Regional Codes Coordinating Committee (RCCC) and its Advisory Boards, endorsed the most recent regional amendments to the 2015 International Codes on September 17, 2015. Furthermore, the Executive Board encourages your jurisdiction to adopt the following 2015 International Codes and regional amendments by January 31, 2016:

- International Building Codes
- International Energy Conservation Code
- International Existing Building Code
- International Fire Code
- International Fuel Gas Code
- International Mechanical Code
- International Plumbing Code
- International Residential Code

Regional amendments to the 2015 International Codes can be found at the following website: www.nctcog.org/envir/codes. In addition, the Executive Board previously endorsed the 2014 National Electrical Code and regional amendments which are available for adoption.

Please Note:
In review of local government's adoption of code amendments, there is a wide range in the fire-fighting philosophies/capabilities of cities across the region; the consensus of the RCCC has been to include both an OPTION "A" and an OPTION "B" in the fire, building and residential code amendments. Jurisdictions should choose one or the other based on their fire-fighting philosophies/capabilities when adopting code amendments.

Notice of Codes Workshop
On November 5, 2015, a free 2015 International Building and Fire Code Workshop will be offered to cover the regional code review process, results of a recent Regional Code Adoption Survey, presentations from Texas A&M Energy Systems Laboratory and South-central Partnership for Energy Efficiency as a Resource, a summary of the 2015 recommended amendments, and upcoming building code training. Register for the workshop at http://www.nctcog.org/envir/events.asp.

616 Six Flags Drive, Centerpoint Two
P. O. Box 5888, Arlington, Texas 76005-5888
(817) 640-3300 FAX: 817-640-7806 ⊙ recycled paper
www.nctcog.org

Regional Code Amendments Background
NCTCOG has actively promoted the standardization of model construction codes since 1967 in an effort to simplify the construction process, advance the safety of building systems, promote common code interpretation, facilitate the mobility of contractors, and reduce training and construction costs. The ultimate goal is regional uniformity in the model construction codes for the North Central Texas region. NCTCOG feels strongly that municipalities, contractors, architects, builders, and manufacturers will benefit from the positive economic results coming from achievement of that goal.

In 2014, the NCTCOG's RCCC directed its Advisory Boards to review the International Code Council's 2015 family of model construction codes. The Advisory Boards, comprised of over 100 code professionals representing local jurisdictions and professional associations, held open meetings to consider the codes and achieve consensus on any needed regional amendments.

As a follow-up measure, the RCCC intends to submit some of the regional amendments as proposed changes during the next international code change cycle. In the past, several NCTCOG regional amendments have been incorporated into the codes at the national level.

NCTCOG appreciates your local government's support of our continued efforts toward regional code uniformity. For more information regarding regional codes, contact Sandra Barba, Senior Planner, Department of Environment and Development, at sbarba@nctcog.org, or 817.608.2368. Please send a copy of your adopted ordinance(s) to NCTCOG including any amendments. Your ordinance will help us to document the effectiveness of the codes coordination effort in our region and may be used to provide a model to other jurisdictions.

Mike Eastland, Executive Director

David Kerr, Chair
Regional Codes Coordinating Committee

Dallas Builders ASSOCIATION

5816 West Plano Parkway
Plano, TX 75093
(972) 931-4840 Fax: (972) 267-0426
www.DallasBuilders.com

February 18, 2016

Selso Mata, Chief Building Official
City of Plano
1520 Avenue K
Plano, Texas 75086-0358

Dear Mr. Mata:

The Dallas Builders Association appreciates the role building codes play in maintaining the integrity of home construction in our area. As such, the Association conducts a detailed review of each International Code Council (ICC) code that pertains to the residential construction industry. This review emphasizes health and safety as well as housing affordability concerns.

As it has for many years, the Association was an active participant in reviewing the 2015 ICC codes serving on the North Central Texas Council of Governments Regional Codes Coordinating Committee (RCCC). Our members and staff were provided an opportunity during that process to convey the industry's concerns and many of those concerns were incorporated into the amendments that are now being considered for adoption by the City of Plano.

Thanks to the RCCC process and for the advanced notice that you have provided the Association to review Plano's local amendments, the Dallas Builders Association is comfortable with the residential provisions of Plano's 2015 code amendments package as presented. As you know, the state's energy code is changing this year and alternative compliance strategies are now under review by Texas A&M Energy Systems Laboratory. We hope that you will accept, through your power to do so in these Amendments, any additional compliance strategies approved by the Laboratory. Doing so will give the industry needed flexibility without detracting from the code's resource conservation objectives.

We appreciate your proactive efforts to seek our input and we look forward to being a continued resource for housing in the City of Plano and throughout the Dallas area.

Sincerely,

Executive Officer
Dallas Buiders Association

OFFICERS

President
Donnie Evans, CGP
Altura Homes

First Vice President
Michael Turner, CGB, GMB, CAPS, CGP, MCGP
Classic Urban Homes

Vice President/Secretary
Alan G. Hoffmann
Alan Hoffmann LLC

Associate Vice President
Cole Baker
BMC

Treasurer
Tom Sadler, CGA, CGP
Tom Sadler & Associates

Executive Officer
Phil Crone, CGP, GSP, JD

2016 INDUSTRY INVESTORS

The Bath & Kitchen Showplace
Dow Building Solutions
Fox Energy Specialists
Hotchkiss Insurance Agency
Johnson Supply
STELLAR Home Theater and Beyond
StrucSure Home Warranty
The Thompson Group at Classic Chevrolet

AFFILIATED WITH:

Texas Association of Builders

National Association of Home Builders

An Ordinance of the City of Plano, Texas repealing City of Plano Ordinance No. 2013-10-25 codified as Article XX, Residential Code, of Chapter 6 of the Code of Ordinances; and adopting the 2015 Edition of the International Residential Code with certain additions, deletions, and amendments, as the Residential Code of the City of Plano; and providing a repealer clause, a severability clause, a savings clause, a penalty clause, a publication clause and an effective date.

WHEREAS, on October 28, 2013, by Ordinance No. 2013-10-25 the City Council of the City of Plano established a Residential Code and provided regulations thereunder, and such Ordinances were codified as Article XX, Residential Code, of Chapter 6 of the Code of Ordinances of the City of Plano ("City"); and

WHEREAS, on October 20, 2015, the Building Standards Commission held a public hearing to discuss the adoption of the 2015 Edition of the International Residential Code, a publication of the International Code Council (I.C.C.), and to receive input from the general public and all persons who may be affected by the proposed adoption; and

WHEREAS, for regulatory purposes due to changes in state law, the City Council is of the opinion that Section 6-710, Chapter 3, Section R325 of Article XX of Chapter 6 of the City Code of Ordinances regarding Automatic Sprinkler Systems, originally established by Ordinance No. 2008-4-39 and retained in the City's Residential Code since that time, should be retained as codified in the City Code of Ordinances and that all remaining provisions of Ordinance No. 2013-10-25 should be repealed; and

WHEREAS, upon recommendation of the Building Standards Commission and upon full review and consideration of all matters attendant and related thereto, the City Council is of the opinion that the 2015 Edition of the International Residential Code, and the local amendments thereto, should be approved and adopted as the Residential Code of the City.

NOW, THEREFORE, BE IT ORDAINED BY THE CITY COUNCIL OF THE CITY OF PLANO, TEXAS, THAT:

Section I. All provisions of Ordinance No. 2013-10-25, duly passed and approved by the City Council of the City of Plano on October 28, 2013, codified as Chapter 6, Article XX of the City of Plano Code of Ordinances are repealed with the exception of the below referenced section which is hereby explicitly retained and shall remain codified in its entirety:

Section 6-710, Chapter 3, Section R325 of Article XX of Chapter 6 of the City of Plano Code of Ordinances established by Ordinance No. 2008-4-39 regarding Automatic Sprinkler Systems as follows:

"**Section R325, Automatic Sprinkler Systems.** An automatic sprinkler system shall be installed in all new buildings 6,000 square feet and greater, and in all existing buildings that are enlarged to be 6,000 square feet or greater, and in building greater than 6,000 square feet which are enlarged. Only gross floor area within the exterior walls shall be used to calculate the building area.

Exception:
a. The floor areas of covered patios and porches open entirely on at least one side, except for guardrails, need not be included in the calculation of the area of the building."

Section II. A new Article XX, Residential Code, of Chapter 6 of the Code of Ordinances is hereby adopted and shall read in its entirety as follows:

ARTICLE XX. RESIDENTIAL CODE

"DIVISION 1. GENERALLY

Section 6-708. Penalty.

Any person, firm or corporation found to be violating any term or provision of this Ordinance, shall be subject to a fine in accordance with Section 1-4(a) of the City Code of Ordinances for each offense. Every day a violation continues shall constitute a separate offense.

Section 6-709. Adopted.

The 2015 Edition of the International Residential Code, a publication of the International Code Council (I.C.C.), along with the Appendices of such Code, is hereby adopted and designated as the Residential Code of the City of Plano to the same extent as if such Code were copied verbatim in this Article, subject to deletions, additions, and amendments prescribed in this Article. A copy of the 2015 Edition of the International Residential Code is on file in the office of the City Secretary.

DIVISION 2. AMENDMENTS

Section 6-710. Deletions, Additions, Amendments.

The following deletions, additions, and amendments to the International Residential Code adopted herein are hereby approved and adopted:

Section R101.1; *insert jurisdiction name as follows:*

R101.1 Title. These regulations shall be known as the *Residential Code for One- and Two-family Dwellings* of the City of Plano, Texas hereinafter referred to as "this *code*."

Section R102.4; *change to read as follows:*

R102.4 Referenced codes and standards. The codes, when specifically adopted, and standards referenced in this code shall be considered part of the requirements of this code to the prescribed extent of each such reference and as further regulated in Sections R102.4.1 and R102.4.2. Whenever amendments have been adopted to the referenced codes and standards, each reference to said code and standard shall be considered to reference the amendments as well. Any reference made to NFPA 70 or the Electrical Code shall mean the Electrical Code as adopted.
Section R104.2 Applications and permits; *amended by the addition of section R104.2.1.*

R104.2.1 Adequate toilet facilities. In partially completed phased subdivisions or projects, more than one permanent or temporary toilet may be required, but not less than one shall be provided and at least one permanent or temporary toilet facility shall be maintained in each subdivision or project for the employees or subcontractors of each builder holding a permit for a building in that subdivision or project. A toilet facility must be provided by each builder as long as the builder holds an active building permit in the subdivision or project.

Permanent toilet facility is defined as a room in an existing building or in the building being constructed with a water closet installed in such a room that conforms to the Plumbing Code and is continuously available to all workers involved in a construction project.

Temporary toilet facility is defined as a portable, fully enclosed, chemically sanitized toilet, which is serviced and cleaned at least once each week.

A Stop Work Order may be issued for any project not in compliance with this section.

Section R104.10.1 Flood Hazard areas*; delete this section.*

Section R105.2 Work exempt from permit; *amend and delete as follows:*
Building:

1. One-story… *{item unchanged}* does not exceed 120 square feet.
2. [*Deleted.*]
5. [*Deleted.*]

Section R105.3 Application for permit; *is amended by the addition of the following paragraphs:*

Registration:
To obtain a permit the applicant shall be registered as a contractor.

a. Registration Requirements: Contractor may register by making application on forms provided by the Building Official. Electrical, irrigation, mechanical, and plumbing contractors shall provide proof of required State of Texas licenses and insurance.
b. Revocation/Suspension: A contractor's registration may be suspended for the following causes:

    1. The contractor fails to finalize permits by obtaining the required, approved inspections.

    2. The contractor allows use or occupancy of a structure for which a permit was obtained without first obtaining the required authorization.

    3. Expiration, suspension or revocation of required license, bond or insurance.

Exception: Homeowners may obtain permits to do work at their residence without being registered.

Section R105.3.1 Action on application*; is amended by the addition of the following paragraph:*

A demolition permit may be withheld for any building or structure within the Plano Historic Building and Site Survey as designated in the Preservation Plan for a period not exceeding thirty (30) days pending review by the Heritage Commission.

Section R105.3.1.1 & R106.1.4; *delete these sections.*

Section R105.10; *amend as follows:*

R105.10 Withdrawn Permits. Permits may be withdrawn by the applicant if no work has commenced on the project. Permit fees exceeding $100.00 may be partially refunded. Where applicable, fees will be refunded at 80 percent of their original value, excluding the plan review and fire protection plan review deposits.

Permits for which work has commenced may not be withdrawn unless a subsequent permittee has obtained a permit to complete the work, or when work has started unless an inspection has been made and the Building Official has determined that the existing work has created no violation of any code or ordinance.

Expired permits may be withdrawn if determined by the Building Official that no work has commenced.

Withdrawn permits with fees of less than fifty ($100) dollars are nonrefundable.

Section R106.1 Submittal documents; *is amended by the addition of the following paragraphs:*

Foundation plans and braced wall plans shall be submitted with each application. These plans shall be designed by an engineer licensed by the State of Texas and shall bear that engineer's seal, signature, and date. Braced wall design plans may be approved by the building official.

All structural plans, 6,000 square feet and greater under roof, shall be designed by an engineer licensed by the State of Texas and shall bear that engineer's seal, signature, and date.

Section R106.3.1 Approval of construction documents; *is changed to read as follows:*

When the building official issues a permit, the construction documents shall be approved, in writing, or by a stamp which states "APPROVED and APPROVED AS NOTED BY THE BUILDING OFFICIAL". *{the remainder of the section is unchanged}*

Section R108.7; *add Section 108.7 to read as follows:*

R108.7 Re-inspection Fee. A re-inspection fee may be charged but not be limited to the following:

1. The inspection called for is not ready when the inspector arrives;
2. No building address or permit card is clearly posted;

3. Approved plans are not on the job site available to the inspector;
4. The building is locked or work otherwise not available for inspection when called;
5. The job site is red-tagged twice for the same item;
6. Violations exist on the property including failure to maintain erosion control, trash control or tree protection.

Section R109 Other Inspections; *add section 109.1.5.2 to read as follows:*

R109.1.5.2 Fences with rolling gates. Where a fence with a rolling gate is constructed a trash dumpster service access pad shall be installed. The trash dumpster service access pad shall be a ten foot by four (10x4) foot space, setback four (4) feet from the edge of the alley or shall be two (2) five foot by four (5x4) foot spaces, setback four (4) feet from the edge of the alley. See figure 109.1.5.2

Section R109 Other Inspections; *add figure R109.1.5.2*

FIGURE R 109.1.5.2 - FENCE LAYOUTS FOR ROLLING GATES

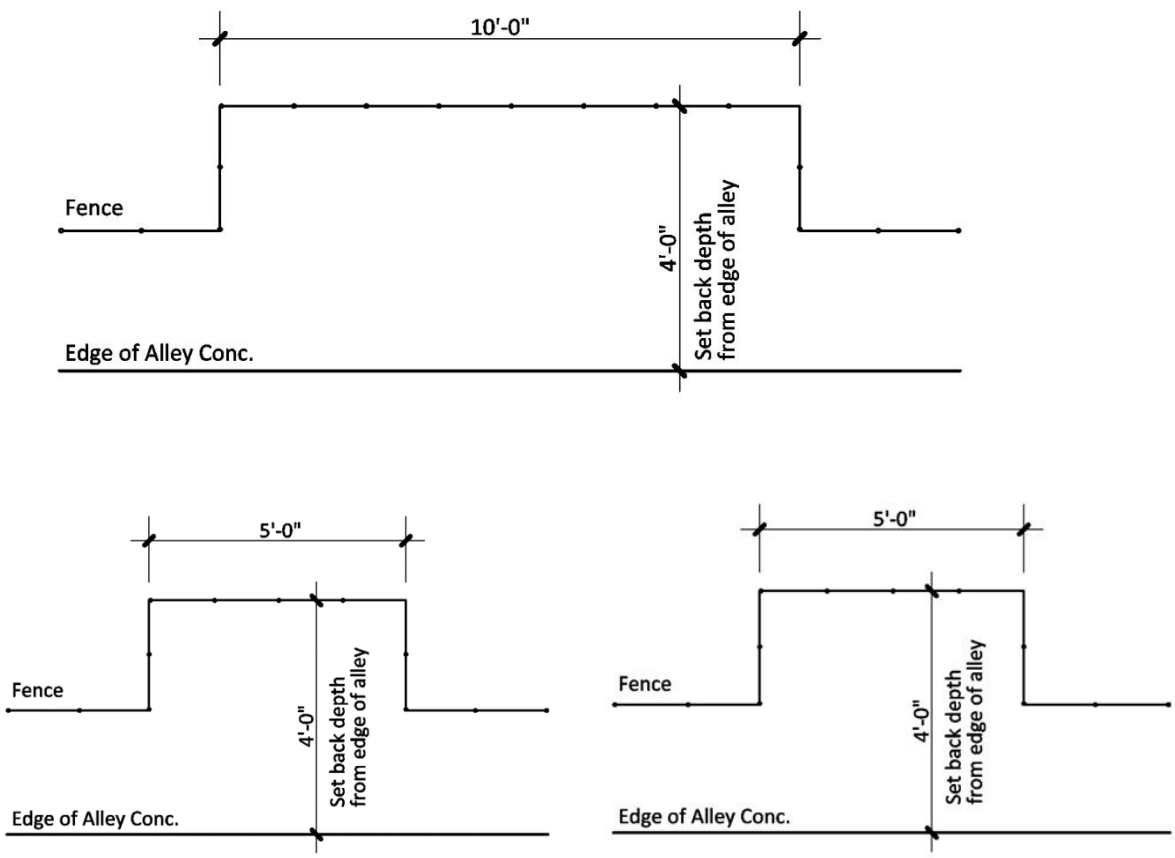

Section R110 (R110.1 through **R110.5);** *are deleted in its entirety*.

Section R112 Board of Appeals; *is changed so that the Section title shall read "Building Standards Commission."*

Section R112.3 Qualifications; *deleted in its entirety.*

Section R114 Stop Work Order; *add Section R114.3 to read as follows*:

Section R114.3 Construction debris

a. Whenever work is being done that is authorized by a permit, and construction debris from that work is not confined to a container or to a site on the property approved by the Building Official or his designee, and such construction debris poses a threat to public health, safety and comfort so that it constitutes a nuisance, the Building Official or his designee may order the worked stopped and the Contractor shall clean up the construction debris within thirty-six (36) hours of receiving written notice of the violation. After the expiration of the thirty-six (36) hour period, Contractor shall pay City a re-inspection fee to offset costs incurred by City due to the necessary re-inspection before the stop work order is lifted.

b. As used herein, the term "Construction Debris" shall include all materials utilized in the construction process, including all litter and debris deposited and left remaining upon the premises of a job site by a Contractor, Subcontractor, and their employees, agents, and assigns.

c. As used herein "Costs" shall mean all expense incurred by City for the cleaning of the job site and the amount of any unpaid municipal court fine.

Section R202 Definitions; *definition of "Townhouse" is changed to read as follows:*

> A single-family dwelling unit constructed in a group of three or more attached units separated by property lines in which each unit extends from foundation to roof and with open space on at least two sides.

Section R202 Definitions; *add definition of "Floor Area, Gross" as follows;*

The floor area within the inside perimeter of the exterior walls of the building under consideration, exclusive of vent shafts and courts, without deduction for corridors, stairways, closets, the thickness of interior walls, columns, or other features. The floor area of a building, or portion thereof, not provided with surrounding exterior walls shall be usable area under the horizontal projection of the roof or floor above. The gross floor area shall not include shafts with no openings or interior courts

Section R202 Definitions; *add definition of "Recreation Room" as follows;*

A room in a dwelling unit, which is intended for such uses as viewing television or films, listening to recordings, or participating in video or similar games. The area of this room is not to exceed one-tenth of the floor area of the habitable space of the dwelling unit.

Table R301.2(1); *fill in as follows:*

GROUND SNOW LOAD	WIND DESIGN				SEISMIC DESIGN CATEGORY[f]
	SPEED[d] (mph)	Topographic Effects[k]	Special Wind Region[L]	Windborne Debris Zone[M]	
5 lb/ft^2	115 (3-sec-gust)/76 fastest mile	No	No	No	A

SUBJECT TO DAMAGE FROM		
Weathering[a]	Frost line depth[b]	Termite[c]
moderate	6”	Very Heavy

WINTER DESIGN TEMP[e]	ICE BARRIER UNDER-LAYMENT REQUIRED[h]	FLOOD HAZARDS[g]	AIR FREEZING INDEX[i]	MEAN ANNUAL TEMP[j]
22°F	No	01/02/80	69 ^{o}F	64.9^{o}F

{No change to footnotes}

Section R302.1 Exterior Walls; *add exception to read as follows:*

Exceptions: *{previous exceptions unchanged}*

6. Open metal carport structures may be constructed when also approved within adopted ordinances.

Section R302.3 Two-family Dwellings; *add exception #3 to read as follows:*

Exceptions:

3. Two-family dwelling units that are also divided by a property line through the structure shall be separated as required for townhouses.

Section R302.5.1; *change to read as follows:*

R302.5.1 Opening protection. Openings from a private garage directly into a room used for sleeping purposes shall not be permitted. Other openings between the garage and residence shall be equipped with solid wood doors not less than 1 3/8” inches (35 mm) in thickness, solid or honeycomb core steel doors not less than 1 3/8”inches (35 mm) thick, or 20-minute fire-rated doors.

Section R303.3 Bathrooms; *amend exception to read as follows:*

> **Exception:** ***{****existing text unchanged****}*** Exhaust air from the space shall be exhaust out to the outdoors unless the space contains only a water closet, a lavatory, or water closet and a lavatory may be ventilated with an approved mechanical recirculating fan or similar device designed to remove odors from the air.

Section R313 Automatic Fire Sprinkler Systems; *delete sections R313.1, R313.1.1, R313.2, R313.2.1 in their entirety.*

Section R314.3 Location; *is amended with the addition of the following:*

5. Enclosed Recreation/Media Room

Section R315.2.2 Alterations, repairs and additions; *amend exception #2 to read as follows:*

Exception:

2. Installation, alteration or repairs of electrical powered, *{remaining text unchanged}*

Section R319.1 Address Numbers; *amend and add to the second sentence as follows:*

….street or road fronting the property, and from rear alleyways adjacent to the property. *{remainder unchanged}*

Section R322 Flood Resistant Construction; *delete section.*

Section R325 Mezzanines*; change number to Section R327 Mezzanines*

Renumber and change the following:
R325.1; *change number to* **R327.1General.**
R325.2; *change number to* **R327.2 Mezzanines.**
R325.3; *change number to* **R327.3 Area limitations.**
R325.4; *change number to* **R327.4 Means of egress.**
R325.5; *change number to* **R327.5 Openness**

Section R326 Swimming Pools, Spas and Hot Tubs; *amended to read as follows:*

R326.1 General. The design and construction of pools and spas shall comply with the **2015 IRC Appendix Q. Swimming Pools, Spas and Hot Tubs.**

Section R401.2; *amended by adding the following sentence to read as follows:*

Section R401.2. Requirements. *{existing text unchanged} …*

Every foundation and/or footing, or any size addition to an existing post-tension foundation, regulated by this code shall be designed and sealed by a Texas-registered engineer.

Subsection R602.6 Drilling and notching of studs; *is amended by the addition to first sentence to read as follows.*

Studs that are drilled or notched for plumbing pipes shall be 2x6 or larger.

Section R602.6.1; *amend the following:*

R602.6.1 Drilling and notching of top plate. When piping or ductwork is placed in or partly in an exterior wall or interior load-bearing wall, necessitating cutting, drilling or notching of the top plate by more than 50 percent of its width, a galvanized metal tie not less than 0.054 inch thick (1.37 mm) (16 Ga) and ½ inches (38) mm 5 inches (127 mm) wide shall be fastened across and to the plate at each side of the opening with not less than eight 10d (0.148 inch diameter) having a minimum length of 1 ½ inches (38 mm) at each side or equivalent. Fasteners will be offset to prevent splitting of the top plate material. The metal tie must extend a minimum of 6 inches past the opening. See figure R602.6.1. {*remainder unchanged}*

Figure R602.6.1; *delete the figure and insert the following figure:*

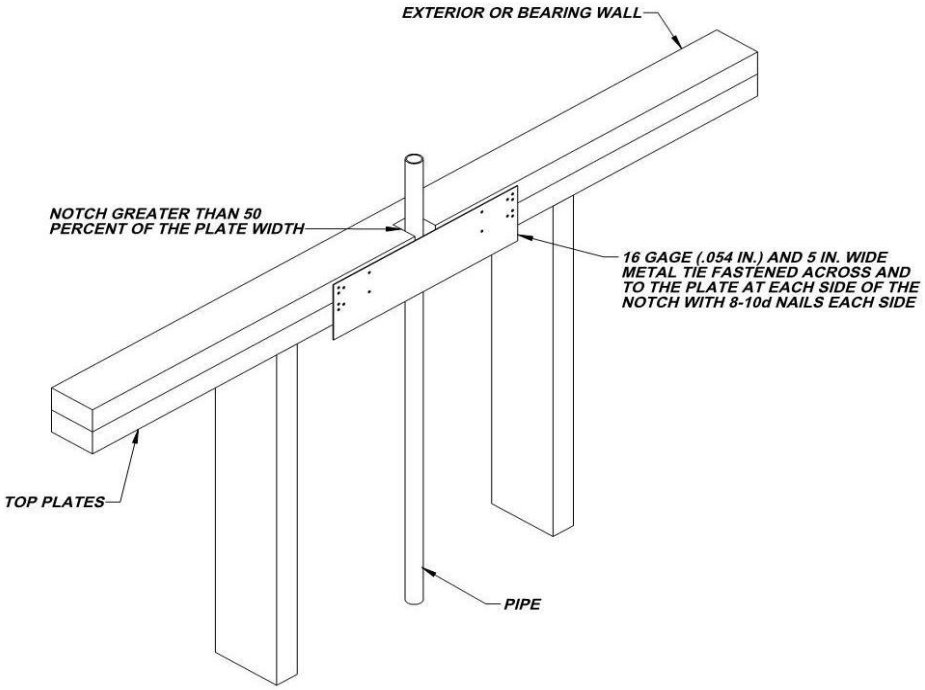

Section R703.8.4.1; *add a second paragraph to read as follows:*

In stud framed exterior wall**s**, all ties shall be anchored to studs as follows:

1. When studs are 16 in (407 mm) o.c., stud ties shall be spaced no further apart than 24 in (737 mm) vertically starting approximately 12 in (381 mm) from the foundation; or

2. When studs are 24 in (610 mm) o.c., stud ties shall be spaced no further apart than 16 in (483 mm) vertically starting approximately 8 in (254 mm) from the foundation.

Section R902.1; *amend and add exception #5 to read as follows:*

R902.1 Roofing covering materials. Roofs shall be covered with materials as set forth in Sections R904 and R905. Class A, B and C roofing shall be installed {*remainder unchanged}*

Exceptions:

1. *{text unchanged}*
2. *{text unchanged}*
3. *{text unchanged}*
4. *{text unchanged}*
5. Non-classified roof coverings shall be permitted on one-story detached *accessory structures* used as tool and storage sheds, and similar uses, provided the floor area does not exceed (area defined by jurisdiction).

Section R905.1 Roof covering applications; *is amended by the addition of the following;*

Roof systems in place prior to January 18, J 988, may be repaired with roof coverings of the same type as the original roof when all the following conditions are met:

1. The repair does not exceed twenty-five (25) percent of the roof.

2. The repair does not result in an increase in the total surface area of the roof.

3. Repairs shall not exceed (twenty-five) (25) percent of the roof surface area within any twelve month period unless Class C or better roof covering is provided.

Shingles and shakes shall be applied to roofs with solid sheathing. Existing roofs may be replaced over spaced sheathing. When spaced sheathing is used, sheathing boards shall not be less than 1- inch by 4-inch (25 mm by 102 mm) nominal dimensions and shall be spaced on centers equal to the weather exposure to coincide with the placcment of fasteners. When 1-inch by 4-inch (25 mm by 102 mm) spaced sheathing is installed at 10 inches (254 mm) on center, additional 1-inch by 4- inch (25 mm by 102 mm) boards must be installed between the sheathing boards.

Chapter 11 [RE] – Energy Efficiency; *deleted in its entirety and replaced with the following:*

N1101.1 Scope. This chapter regulates the energy efficiency for the design and construction of buildings regulated by this code.

N1101.2 Compliance. Compliance shall be demonstrated by meeting the requirements of the residential provisions of 2015 International Energy Conservation Code.

Section M1305.1.3; *change to read as follows:*

M1305.1.3 Appliances in attics. *Attics* containing *appliances* shall be provided . . . *{bulk of paragraph unchanged}* . . . sides of the *appliance* where access is required. The clear access opening dimensions shall be a minimum of 20 inches by 30 inches (508 mm by 762 mm), or larger and large enough to allow removal of the largest *appliance*. A walkway to an appliance shall be rated as a floor as approved by the building official. As a minimum, for *access* to the attic space, provide one of the following:

1. A permanent stair.
2. A pull down stair with a minimum 300 lb (136 kg) capacity.
3. An *access* door from an upper floor level.

Exceptions:

1. The passageway and level service space are not required where the *appliance* can be serviced and removed through the required opening.
2. Where the passageway is unobstructed…*{remaining text unchanged}*

Section Ml307.3.1 Protection from impact; *is deleted in its entirety.*

Section M1411.3; *change to read as follows:*

M1411.3 Condensate disposal. Condensate from all cooling coils or evaporators shall be conveyed from the drain pan outlet to a sanitary sewer through a trap, by means of a direct or indirect drain. *{remaining text unchanged}*

Section M1411.3.1; *add text to items # 3 and # 4 to read as follows:*

M1411.3.1 Auxiliary and secondary drain systems. *{bulk of paragraph unchanged}*

1. *{text unchanged}*
2. *{text unchanged}*
3. An auxiliary drain pan… *{bulk of text unchanged}*... with Item 1 of this section. A water level detection device may be installed only with prior approval of the *building official*.
4. A water level detection device… *{bulk of text unchanged}*... overflow rim of such pan. A water level detection device may be installed only with prior approval of the *building official*.

Section M1411.3.1.1; *add text to read as follows:*

M1411.3.1.1 Water-level monitoring devices. On down-flow units …*{bulk of text unchanged}*… installed in the drain line. A water level detection device may be installed only with prior approval of the *building official.*

Section M1503.4 Makeup air required; *amend and add exception as follows:*

M1503.4 Makeup air required. Exhaust hood systems capable of exhausting in excess of 400 cubic feet per minute (0.19 m3/s) shall be provided with makeup air at a rate approximately equal to the difference between the exhaust air rate and 400 cubic feet per minute. Such makeup air systems shall be equipped with a means of closure and shall be automatically controlled to start and operate simultaneously with the exhaust system.

Exception: Where all appliances in the house are of sealed combustion, power-vent, unvented, or electric, the exhaust hood system shall be permitted to exhaust up to 600 cubic feet per minute (0.28 m3/s) without providing makeup air. Exhaust hood systems capable of exhausting in excess of 600 cubic feet per minute (0.28 m3/s) shall be provided with a makeup air at a rate approximately equal to the difference between the exhaust air rate and 600 cubic feet per minute.

Section M2005.2; *change to read as follows:*

M2005.2 Prohibited locations. Fuel-fired water heaters shall not be installed in a room used as a storage closet. Water heaters located in a bedroom or bathroom shall be installed in a sealed enclosure so that *combustion air* will not be taken from the living space. Access to such enclosure may be from the bedroom or bathroom when through a solid door, weather-stripped in accordance with the exterior door air leakage requirements of the *International Energy Conservation Code* and equipped with an *approved* self-closing device. Installation of direct-vent water heaters within an enclosure is not required

Section G2408.3 Private Garages (305.5); *deleted in its entirety.*

Section G2415.2.1 (404.2.1) CSST Piping Systems; *add a second paragraph to read as follows:*

Both ends of each section of medium pressure gas piping shall identify its operating gas pressure with an *approved* tag. The tags are to be composed of aluminum or stainless steel and the following wording shall be stamped into the tag:

"WARNING: 1/2 to 5 psi gas pressure - Do Not Remove"

Section G2415.2.2 CSST Piping Systems Requirement (404.2.2) ; *add an exception to read as follows:*

Exception: Corrugated stainless steel tubing (CSST) shall be a minimum of 1/2" (18 EDH).

Section G2415.12 (404.12); *change to read as follows:*

G2415.12 (404.12) Minimum burial depth. Underground *piping systems* shall be installed a minimum depth of 18 inches (457 mm) below grade.

Section G2417.1 (406.1); *change to read as follows:*

G2417.1 (406.1) General. Prior to acceptance and initial operation, all *piping* installations shall be inspected and *pressure tested* to determine that the materials, design, fabrication, and installation practices comply with the requirements of this *code*. The *permit* holder shall make the applicable tests prescribed in Sections 2417.1.1 through 2417.1.5 to determine compliance with the provisions of this *code*. The *permit* holder shall give reasonable advance notice to the *building official* when the *piping system* is ready for testing. The *equipment*, material, power and labor necessary for the inspections and test shall be furnished by the *permit* holder and the *permit* holder shall be responsible for determining that the work will withstand the test pressure prescribed in the following tests.

Section G2417.4.1; *change to read as follows:*

G2417.4.1 (406.4.1) Test pressure. The test pressure to be used shall be no less than 3 psig (20 kPa gauge), or at the discretion of the Code Official, the piping and valves may be tested at a pressure of at least six (6) inches (152 mm) of mercury, measured with a manometer or slope gauge. For tests requiring a pressure of 3 psig, diaphragm gauges shall utilize a dial with a minimum diameter of three and one half inches (3 ½”), a set hand, 1/10 pound incrementation and pressure range not to exceed 6 psi for tests requiring a pressure of 3 psig. For tests requiring a pressure of 10 psig, diaphragm gauges shall utilize a dial with a minimum diameter of three and one-half inches (3 ½”), a set hand, a minimum of 2/10 pound incrementation and a pressure range not to exceed 20 psi. For welded piping, and for piping carrying gas at pressures in excess of fourteen (14) inches water column pressure (3.48 kPa) (1/2 psi) and less than 200 inches of water column pressure (52.2 kPa) (7.5 psi), the test pressure shall not be less than ten (10) pounds per square inch (69.6 kPa). For piping carrying gas at a pressure that exceeds 200 inches of water column (52.2 kPa) (7.5 psi), the test pressure shall be not less than one and one-half times the proposed maximum working pressure.

Diaphragm gauges used for testing must display a current calibration and be in good working condition. The appropriate test must be applied to the diaphragm gauge used for testing

Section G2417.4.2; *change to read as follows:*

G2417.4.2 (406.4.2) Test duration. The test duration shall be held for a length of time satisfactory to the *Building Official*, but in no case for less than fifteen (15) minutes. For welded *piping*, and for *piping* carrying gas at pressures in excess of fourteen (14) inches water column pressure (3.48 kPa), the test duration shall be held for a length of time satisfactory to the *Building Official*, but in no case for less than thirty (30) minutes.

Section G2420.1 (406.1); *add Section G2420.1.4 to read as follows:*

G2420.1.4 Valves in CSST installations. Shutoff *valves* installed with corrugated stainless steel (CSST) *piping systems* shall be supported with an approved termination fitting, or equivalent support, suitable for the size of the *valves*, of adequate strength and quality, and located at intervals so as to prevent or damp out excessive vibration but in no case greater than 12-inches from the center of the *valve*. Supports shall be installed so as not to interfere with the free expansion and contraction of the system's *piping*, fittings, and *valves* between anchors.

All *valves* and supports shall be designed and installed so they will not be disengaged by movement of the supporting *piping*.

Section G2420.5.1 (409.5.1); *add text to read as follows:*

G2420.5.1 (409.5.1) Located within the same room. The shutoff valve …*{bulk of paragraph unchanged}*… in accordance with the appliance manufacturer's instructions. A secondary shutoff valve must be installed within 3 feet (914 mm) of the firebox if appliance shutoff is located in the firebox.

Section G2421.1 (410.1); *add text and exception to read as follows:*

G2421.1 (410.1) Pressure regulators. A line *pressure regulator* shall be … *{bulk of paragraph unchanged}*… *approved* for outdoor installation. Access to *regulators* shall comply with the requirements for access to *appliances* as specified in Section M1305.

> **Exception:** A passageway or level service space is not required when the *regulator* is capable of being serviced and removed through the required *attic* opening.

Section G2422.1.2.3 (411.1.3.3); *delete exception 1 and exception 4.*

Section G2445.2 (621.2); *add exception to read as follows:*

G2445.2 (621.2) Prohibited use. One or more *unvented room heaters* shall not be used as the sole source of comfort heating in a *dwelling unit*.

> **Exception:** Existing *approved unvented room heaters* may continue to be used in *dwelling units*, in accordance with the *code* provisions in effect when installed, when *approved* by the *Building Official* unless an unsafe condition is determined to exist as described in *International Fuel Gas Code* Section 108.7 of the Fuel Gas Code.

Section G2448.1.1 (624.1.1); *change to read as follows:*

G2448.1.1 (624.1.1) Installation requirements. The requirements for *water heaters* relative to access, sizing, relief valves, drain pans and scald protection shall be in accordance with this *code.*

Section P2603.5.1; *add to read as follows:*

P2603.5.1 Sewer Depth. Building sewers that connect to private sewage disposal systems shall be not less than 6 inches *{remainder unchanged}.* Building sewers shall be not less than 6 inches below grade.

Section P2801.6.1; *change to read as follows:*

P2801.6.1 Pan size and drain. The pan shall be not less than 11/2 inches (38 mm) in depth and shall be of sufficient size and shape to receive all dripping or condensate from the tank or water heater. The pan shall be drained by an indirect waste pipe having a diameter of not less than 3/4 inch (19 mm). Piping for safety pan drains shall be of those materials listed in IPC Table 605.4. Multiple pan drains may terminate to a single discharge piping system when *approved* by the administrative authority and permitted by the manufactures installation instructions and installed with those instructions.

Section P2801.7; *add exception to read as follows:*

Exceptions:

1. Electric Water Heater.

Section P2902.5.3; *change to read as follows:*

P2902.5.3 Lawn irrigation systems. The potable water supply to lawn irrigation systems shall be protected against backflow by an atmospheric-type vacuum breaker, a pressure-type vacuum breaker, a double-check assembly or a reduced pressure principle backflow preventer. A valve shall not be installed downstream from an atmospheric vacuum breaker. Where chemicals are introduced into the system, the potable water supply shall be protected against backflow by a reduced pressure principle backflow preventer.

Table **P2906.4;** *change to read as follows.*

Table P2906.4 Water Service Pipe; *amended by the deletion of "PVC plastic pipe".*

Section P3111 Combination Waste and Vent System; *delete in its entirety***.**

Section P3112.2; *delete and replace with the following:*

P3112.2 Installation. Traps for island sinks and similar equipment shall be roughed in above the floor and may be vented by extending the vent as high as possible, but not less than the drainboard height and then returning it downward and connecting it to the horizontal sink drain immediately downstream from the vertical fixture drain. The return vent shall be connected to the horizontal drain through a wye-branch fitting and shall, in addition, be provided with a foot vent taken off the vertical fixture vent by means of a wye-branch immediately below the floor and extending to the nearest partition and then through the roof to the open air or may be connected to other vents at a point not less than six (6) inches (152 mm) above the flood level rim of the fixtures served. Drainage fittings shall be used on all parts of the vent below the floor level and a minimum slope of one-quarter (1/4) inch per foot (20.9 mm/m) back to the drain shall be maintained. The return bend used under the drain-board shall be a one (1) piece fitting or an assembly of a forty-five (45) degree (0.79 radius), a ninety (90) degree (1.6 radius) and a forty-five (45) degree (0.79 radius) elbow in the order named. Pipe sizing shall be as elsewhere required in this Code. The island sink drain, upstream of the return vent, shall serve no other fixtures. An accessible cleanout shall be installed in the vertical portion of the foot vent.

Chapters 34-43; *deleted in their entirety. Replace with the 2014 National Electrical Code*

Appendix M, "Home Day Care — R3 Occupancy; *amended to read as follows:*

REQUIREMENTS FOR GROUP R; DIVISION 3.1 OCCUPANCIES
"In Home Daycare"

Subsection AM101.I General; *changed in its entirety to read as follows;*

Building or parts of buildings classified as R3.1 shall comply the provisions noted below along with any non-amended provisions located in Appendix M .

Subsection AM101.2 Special Provisions *is added:*

All rooms or spaces used for the purpose of providing daycare shall be located on the ground floor. All stairways or ramps providing access to areas above or below the ground floor shall be made inaccessible to children by means of an approved permanent barrier located at the ground floor.

Subsection AM101.3 Certificate of Occupancy *is added.*

A Certificate of Occupancy is required for all buildings containing R-3.1 occupancy. Such Certificate of Occupancy must be renewed annually in conjunction with the State mandated inspections conducted by the Fire Department. The Certificate of Occupancy will only be renewed when it is determined by the Fire Marshall that the building complies with all the provisions of this Chapter. Application for the Certificate of Occupancy shall be made in the Office of the Building Official and a fee shall be collected as prescribed in the approved fee schedule.

Section AM102 — Definitions *added the following:*

In home daycare or Day Care Center (in home) - An operation providing care in the caretaker's residence for less than 24 hours a day for up to 8 children under the age of 14, provided that the total number of children, including the caretaker's own children, is no more than 8 at any time. (ZC 20012-21, Ordinance No. 2012-8-16); if required by the State of Texas, the daycare must be licensed or registered.

Habitable rooms - Rooms use for living, sleeping, eating, anad cooking.

Subsection AM103.1.2 Basements; *is deleted in its entirety*.

Subsection AM103.3; *adds the following*:

Subsection AM103.3 Type of lock and latches for exits. An approved emergency plan shall be posted and maintained in the dwelling.

Section AM104 Smoke Detection; *is changed in its entirety and replacing AM104.1, AM104.2, and AM104.3 with the following sections:*

Subsection AM104.1 General. Every habitable room in buildings housing R3.1 Occupancies shall be equipped with an approved smoke detector. All such smoke detectors shall be interconnected in such a manner that if smoke is detected by a detector, all of the detectors will alarm.

Exceptions: An approved heat detector may be substituted for the required smoke detector located in the kitchen in R3.1 Occupancies. All other requirements for smoke detection equipment for R3.1 Occupancies must be met.

Subsection AM104.2 Kitchens. Kitchens in buildings housing R3.1 Occupancies shall be equipped with an approved 2A:10-B:C fire extinguisher. An additional approved 2A:10-B:C fire extinguisher shall be located in the area of the building used for daycare purposes.

Appendix Q Reserved; *amended to read as follows:*

Appendix Q. Swimming Pools, Spas and Hot Tubs.

SECTION AQ101 GENERAL

AQ101.1 General. The provisions of this appendix shall control the design and construction of swimming pools, spas and hot tubs installed in or on the lot of a one- or two-family dwelling.

AQ101.2 Pools in flood hazard areas. Pools that are located in flood hazard areas established by Table R301.2(1), including above-ground pools, on- ground pools and in-ground pools that involve placement of fill, shall comply with Section AQ101.2.1 or AQ101.2.2.

Exception: Pools located in riverine flood hazard areas which are outside of designated floodways.

AQ101.2.1 Pools located in designated floodways. Where pools are located in designated floodways, documentation shall be submitted to the building official which demonstrates that the construction of the pool will not increase the design flood elevation at any point within the jurisdiction.

AQ101.2.2 Pools located where floodways have not been designated. Where pools are located where design flood elevations are specified but floodways have not been designated, the applicant shall provide a floodway analysis that demonstrates that the proposed pool will not increase the design flood elevation more than 1 foot (305 mm) at any point within the jurisdiction.

SECTION AQ102 DEFINITIONS

AQ102.1 General. For the purposes of these requirements, the terms used shall be defined as follows and as set forth in Chapter 2.

ABOVE-GROUND/ON-GROUND POOL. See "Swimming pool."

BARRIER. A fence, wall, building wall or combination thereof which completely surrounds the swimming pool and obstructs access to the swimming pool.

HOT TUB. See "Swimming pool."

IN-GROUND POOL. See "Swimming pool."

RESIDENTIAL. That which is situated on the premises of a detached one- or two-family dwelling, or a one-family townhouse not more than three stories in height.

SPA, NONPORTABLE. See "Swimming pool."

SPA, PORTABLE. A nonpermanent structure intended for recreational bathing, in which all controls, water-heating and water-circulating equipment are an integral part of the product.

SWIMMING POOL. Any structure intended for swimming or recreational bathing that contains water more than 24 inches (610 mm) deep. This includes in-ground, above-ground and on-ground swimming pools, hot tubs and spas.

SWIMMING POOL, INDOOR. A swimming pool which is totally contained within a structure and surrounded on all four sides by the walls of the enclosing structure.

SWIMMING POOL, OUTDOOR. Any swimming pool which is not an indoor pool.

SECTION AQ103 SWIMMING POOLS

AQ103.1 In-ground pools.. In-ground pools shall be designed and constructed in compliance with ANSI/NSPI-5.

AQ103.2 Above-ground and on-ground pools. Above-ground and on-ground pools shall be designed and constructed in compliance with ANSI/NSPI-4.

AQ103.3 Pools in flood hazard areas. In flood hazard areas established by Table R301.2(1), pools in coastal high-hazard areas shall be designed and constructed in compliance with ASCE 24.

SECTION AQ104 SPAS AND HOT TUBS

AQ104.1 Permanently installed spas and hot tubs. Permanently installed spas and hot tubs shall be designed and constructed in compliance with ANSI/NSPI-3.

AQ104.2 Portable spas and hot tubs. Portable spas and hot tubs shall be designed and constructed in compliance with ANSI/NSPI-6.

SECTION AQ105 BARRIER REQUIREMENTS

AQ105.1 Application. The Provisions of this appendix shall control the design of barriers for residential swimming pools, spas and hot tubs. These design controls are intended to provide protection against potential drownings and near-drownings by restricting access to swimming pools, spas and hot tubs.

AQ105.2 Outdoor swimming pool. An outdoor swimming pool, including an in-ground, above-ground or on-ground pool, hot tub or spa shall be surrounded by a barrier which shall comply with the following:

1. The top of the barrier shall be at least 48 inches (1219mm) above grade measured on the side of the barrier, which faces away from the swimming pool. The maximum vertical clearance between grade and the bottom of the barrier shall be 2 inches (51mm) measured on

the side of the barrier, which faces away from the swimming pool. Where the top of the pool structure is above grade, such as an above-ground pool, the barrier may be at ground level, such as the pool structure, or mounted on top of the pool structure. Where the barrier is mounted on top of the pool structure, the maximum vertical clearance between the top of the pool structure and the bottom of the barrier shall be 4 inches (102mm).

2. Openings in the barrier shall not allow passage of a 4-inch-diameter (102mm) sphere.

3. Solid barriers which do not have openings, such as a masonry or stone wall, shall not contain indentations or protrusions except for normal construction tolerances and tooled masonry joints.

4. Where the barrier is composed of horizontal and vertical members and the distance between the tops of the horizontal members is less than 45 inches (1143mm), the horizontal members shall be located on the swimming pool side of the fence. Spacing between vertical members shall not exceed 1.75 inches (44mm) in width. Where there are decorative cutouts within vertical members, spacing within the cutouts shall not exceed 1.75 inches (44 mm) in width.

5. Where the barrier is composed of horizontal and vertical members and the distance between the tops of the horizontal members is 45 inches (1143 mm) or more, spacing between vertical members shall not exceed 4 inches (102 mm). Where there are decorative cutouts within vertical members, spacing within the cutouts shall not exceed 1.75 inches (44 mm) in width.

6. Maximum mesh size for chain link fences shall be a 2.25-inch (57 mm) square unless the fence is provided with slats fastened at the top or the bottom which reduce the openings to not more than 1.75 inches (44 mm).

7. Where the barrier is composed of diagonal members, such as a lattice fence, the maximum opening formed by the diagonal members shall not be more than 1.75 inches (44 mm).

8. Access gates shall comply with the requirements of Section AQ105.2, Items 1 through 7, and shall be equipped to accommodate a locking device. Pedestrian access gates shall open outward away from the pool and shall be self-closing and have a self-latching device. Gates other than pedestrian access gates shall have a self-latching device. Where the release mechanism of the self-latching device is located less than 54 inches (1372 mm) from the bottom of the gate, the release mechanism and openings shall comply with the following:

> 8.1. The release mechanism shall be located on the pool side of the gate at least 3 inches (76 mm) below the top of the gate, and
> 8.2. The gate and barrier shall have not opening greater than 0.5 inch (13 mm) within 18 inches (457 mm) of the release mechanism.

9. Where a wall of a dwelling serves a part of the barrier one of the following conditions shall be met:

> 9.1. The pool shall be equipped with a powered safety cover in compliance with ASTM F1346; or
> 9.2. Doors with direct access to the pool through that wall shall be equipped with an alarm which produces an audible warning when the door and/or its screen, if present, are

opened. The alarm shall be listed and labeled in accordance with UL 2017. The deactivation switch (es) shall be located at least 54 inches (1372 mm) above the threshold of the door; or

9.3. Other means of protection, such as self-closing doors with self-latching devices, which are approved by the governing body, shall be acceptable as long as the degree of protection afforded is not less than the protection afforded by Item 9.1 or 9.2 described above.

10. Where an above-ground pool structure is used as a barrier or where the barrier is mounted on top of the pool structure, and the means of access is a ladder or steps, then:

10.1. The ladder or steps shall be capable of being secured, locked or removed to prevent access, or

10.2. The ladder or steps shall be surrounded by a barrier which meets the requirements of Section AQ105.2, Items 1 through 9. When the ladder or steps are secured, locked or removed, any opening created shall not allow the passage of a 4-inchdiameter (102 mm) sphere.

AQ105.3 Indoor swimming pool. Walls surrounding an indoor swimming pool shall comply with Section AQ105.2, Item 9.

AQ105.4 Prohibited locations. Barriers shall be located so as to prohibit permanent structures, equipment or similar objects from being used to climb them.

AQ105.5 Barrier exceptions. Spas or hot tubs with a safety cover which complies with ASTM F 1346, as listed in Section AQ107, shall be exempt from the provisions of this appendix

SECTION AQ106 ENTRAPMENT PROTECTION FOR SWIMMING POOL AND SPA SUCTION OUTLETS

AQ106.1 General. Suction outlets shall be designed and installed in accordance with ANSI/APSP-7.

SECTION AQ107 ABBREVIATIONS

AQ107.1 General.

ANSI—American National Standards Institute
11 West 42nd Street
New York, NY 10036

APSP—Association of Pool and Spa Professionals
NSPI—National Spa and Pool Institute
2111 Eisenhower Avenue
Alexandria, VA 22314

ASCE—American Society of Civil Engineers
1801 Alexander Bell Drive
Reston, VA 98411-0700

ASTM—ASTM International

100 Barr Harbor Drive
West Conshohocken, PA 19428

UL—Underwriters Laboratories, Inc.
333 Pfingsten Road
Northbrook, IL 60062-2096

SECTION AQ108 REFERENCED STANDARDS

AQ108.1 General.

ANSI/NSP		
ANSI/NSPI-3—99	Standard for Permanently Installed Residential Spas	AQ104.1
ANSI/NSPI-4—99	Standard for Above-ground/ On-ground Residential Swimming Pools	AQ103.2
ANSI/NSPI-5—03	Standard for Residential In-ground Swimming Pools	AQ103.1
ANSI/NSPI-6—99	Standard for Residential Portable Spas	AQ104.2
ANSI/APSP		
ANSI/APSP-7—06	Standard for Suction Entrapment Avoidance in Swimming Pools, Wading Pools, Spas, Hot Tubs and Catch Basins	AQ106.1
ASCE		
ASCE/SEI-24—05	Flood-resistant Design and Construction	AQ103.3
ASTM		
ASTM F 1346—91 (2003)	Performance Specification for Safety Covers and Labeling Requirements for All Covers for Swimming Pools Spas and Hot Tubs	AQ105.2, AQ105.5
UL 2017—2000	Standard for General-purpose Signaling Devices and Systems—with revisions through June 2004	AQ105.2”

Section III. All provisions of the Code of Ordinances of the City of Plano in conflict with the provisions of this Ordinance are hereby repealed, and all other provisions of the Code of Ordinances of the City of Plano, not in conflict with the provisions of this Ordinance, shall remain in full force and effect.

Section IV. It is the intention of the City Council that this Ordinance, and every provision thereof, shall be considered severable, and the invalidity or unconstitutionality of any section, clause, provision or portion of this Ordinance shall not affect the validity or constitutionality of any other portion of this Ordinance.

Section V. The repeal of any Ordinance or part of Ordinances effectuated by the enactment of this Ordinance shall not be construed as abandoning any action now pending under or by virtue of such Ordinance or as discontinuing, abating, modifying or altering any penalty accruing or to accrue, or as affecting any rights of the municipality under any section or provisions of any Ordinances at the time of passage of this Ordinance.

Section VI. Any person, firm or corporation found to be violating any term or provision of this Ordinance, shall be subject to a fine in accordance with Section 1-4(a) of the City Code of Ordinances for each offense. Every day a violation continues shall constitute a separate offense.

Section VII. This Ordinance shall become effective April 1, 2016, and after its passage and publication as required by law.

DULY PASSED AND APPROVED this the 14th day of March, 2016.

_____

Harry LaRosiliere, MAYOR

ATTEST:

_____

Lisa C. Henderson, CITY SECRETARY

APPROVED AS TO FORM:

_____

Paige Mims, CITY ATTORNEY